DITEC

AUTOMATIC ENTRANCE SPECIALISTS

CE

Super Transit 95 - Transit 97
Transit UE

IP1772 - rev. 2005-05-23

(I) Manuale di installazione e manutenzione per porte battenti

(GB) Installation and maintenance manual for swing door

(F) Manuel d'installation et d'entretien pour portes battantes

(D) Montage und Wartungshandbuch für Drehtürenantrieb

(E) Manual de instalaciòn y manutenciòn para puertas de vaivén

(P) Instalação e Manutenção para portas de balanço

DITEC S.p.A.
Via Mons. Banfi, 3 -21042 Caronno Pertusella (VA) - ITALY
Tel. +39 02 963911 - Fax +39 02 9650314
www.ditec.it - ditec@ditecva.com

ICIM
ISO 9001
Cert. n° 0957

GB

GENERAL SAFETY PRECAUTIONS

⚠ This installation manual is intended for professionally competent personnel only.

Installation, electrical connections and adjustments must be performed in accordance with Good Working Methods and in compliance with applicable regulations.

Before installing the product, carefully read the instructions. Bad installation could be hazardous.

The packaging materials (plastic, polystyrene, etc.) should not be discarded in the environment or left within reach of children, as these are a potential source of hazard. Before installing the product, make sure it is in perfect condition.

Do not install the product in an explosive environment and atmosphere: gas or inflammable fumes are a serious hazard risk.

Before installing the motors, make all structural changes relating to safety clearances and protection or segregation of all areas where there is risk of being crushed, cut or dragged, and danger areas in general.

Make sure the existing structure is up to standard in terms of strength and stability.

The motor manufacturer is not responsible for failure to use Good Working Methods in building the frames to be motorised or for any deformation occurring during use.

The safety devices (photocells, safety edges, emergency stops, etc.) must be installed taking into account: applicable laws and directives, Good Working Methods, installation premises, system operating logic and the forces developed by the motorised door or gate.

The safety devices must protect any areas where the risk exists of being crushed, cut or gragged, or where there are any other risks generated by the motorised door or gate. Apply hazard area notices required by applicable regulations.

Each installation must clearly show the identification details of the motorised door or gate.

⚠ Before making power connections, make sure the plate details correspond to those of the power mains.

Fit an omnipolar disconnection switch with a contact opening gap of at least 3 mm. Make sure an adequate residual current circuit breaker and overcurrent cutout are fitted upstream of the electrical system.

When necessary, connect the motorised door or gate to a reliable earth system made in accordance with applicable safety regulations. During installation, maintenance and repair, interrupt the power supply before opening the lid to access the electrical parts.

⚠ To handle electronic parts, wear earthed antistatic conductive bracelets.

The motor manufacturer declines all responsibility in the event of component parts being fitted that are not compatible with the safe an correct operation.

For repairs or replacements of products only original spare parts must be used.

The installer shall provide all information relating to automatic, manual and emergency operation of the motorised door or gate, and provide the user with operating instructions.

MACHINERY DIRECTIVE

Pursuant to Machinery Directive (98/37/EC) the installer who motorises a door or gate has the same obligations as the manufacturer of machinery and as such must:

- prepare the technical file which must contain the documents indicated in Annex V of the Machinery Directive; (The technical file must be kept and placed at the disposal of competent national authorities for at least ten years from the date of manufacture of the motorised door);
- draft the EC declaration of conformity in accordance with Annex II-A of the Machinery Directive and deliver it to the customer;
- affix the CE marking on the power operated door in accordance with point 1.7.3 of Annex I of the Machinery Directive.

For more information consult the “Technical Manual Guidelines” available on Internet at the following address: www.ditec.it

APPLICATIONS

Service life: 5 (minimum 5 years of working life with 600 cycles a day)

Applications: HEAVY DUTY (For vehicle or pedestrian accesses to institutional complexes with very intense use).

- Performance characteristics are to be understood as referring to the recommended weight (approx. 2/3 of maximum permissible weight). A reduction in performance is to be expected when the access is made to operate at the maximum permissible weight.
- Service class, running times, and the number of consecutive cycles are to be taken as merely indicative having been statistically determined under average operating conditions, and are therefore not necessarily applicable to specific conditions of use. During given time spans product performance characteristics will be such as not to require any special maintenance.
- The actual performance characteristics of each automatic access may be affected by independent variables such as friction, balancing and environmental factors, all of which may substantially alter the performance characteristics of the automatic access or curtail its working life or parts thereof (including the automatic devices themselves). When setting up, specific local conditions must be duly borne in mind and the installation adapted accordingly for ensuring maximum durability and trouble-free operation.

DECLARATION BY THE MANUFACTURER

(Directive 98/37/EC, Annex II, sub B)

Manufacturer: DITEC S.p.A.

Address: via Mons. Banfi, 3
21042 Caronno P.lla (VA) - ITALY

Herewith declares that the electromechanical automatic system for swing doors series Super Transit 95, Transit 97 and Transit UE.

- is intended to be incorpored into machinery or to be assembled with other machinery to constitute machinery convered by Directive 98/37/EC;
- is in conformity with the provisions of the following other EEC directives:
  Electromagnetic Compatibility Directive 89/336/EEC;
  Low Voltage Directive 73/23/EEC;

and furthermore declares that it is not allowed to put the machinery into service until the machinery into which it is to be incorporated or of which it is to be a component has been found and declared to be in conformity with the provisions of Directive 98/37/EC and with national implementing legislation.

Caronno Pertusella, 16-07-2003

Fermo Bressanini
(Chairman)

1. TECHNICAL DETAILS

	TRANSIT UE	SUPER TRANSIT 95	TRANSIT 97
Power supply	230 V~ / 50-60 Hz		
Absorption	1 A		
Torque	30 Nm	/	/
Intermittence	S2 = 30 min. / S3 = 80%		
Opening time	2÷10 s/90°	3÷6 s/90°	3÷6 s/90°
Closing time	3÷8 s/90°	4÷8 s/90°	4÷8 s/90°
Operation type	Motor opening Spring closign	Motor opening Spring closign	Motor opening and closing
Accessories power supply	24 V= / 0,3 A (nominal) - 0,5 A (peak)		
Temperature	-20° C / +55° C (Batteries +5°C / +40° C)		
Degree of protection	IP31		
Product dimensions	560x127x116 (short type) - 800x127x116 (long type)		
Product weight	12 kg		
Control panel	196	195O	197O
Applications: **mm = door wing width** **kg = door wing weight** **Recommended dimensions for Heavy Duty use (600 cycles/day)** **Limit dimensions for intensive use (100÷200 cycles/day)**	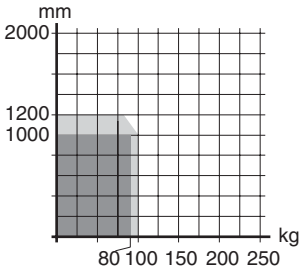	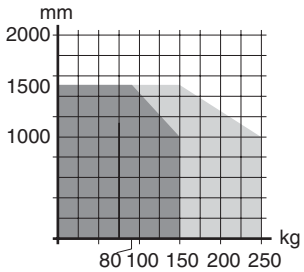	

2. REFERENCE TO ILLUSTRATION

The given operating and performance features can only be guaranteed with the use of DITEC accessories and safety devices.

2.1 STANDARD INSTALLATION REFERENCES (fig. 1)

[1] Geared motor
[2] Radar
[3] Sliding arm
[4] Connect power supply to a type-approved omnipolar switch with a contact opening gap of no less that 3 mm (not supplied by us).
Connection to supply mains must be carried out in an independent raceway separate from control connections and safety device connections.

2.2 AUTOMATION REFERENCES (fig. 2-3)

[5] Control panel
[6] Casing
[7] Base plate
[8] Heads
[9] Batteries (long type automations only)
[10] Damper fixing bracket

3. INSTALLATION

Unless otherwise specified, all measurements are expressed in millimetres (mm).

3.1 PRELIMINARY CHECKS

Check stability, the weight of the door and that movement is smooth and free of friction (if necessary strengthen the frame). Any door closers must be removed or completely cancelled.

Important: automations installed on door partitioning interiors with different pressure, or subject to wind thrust could show irregular operation.

3.2 BASE PLATE FASTENING

- (Fig. 4) Open the casing [6] by pressing firmly sideways.
- Remove the heads [8], detach the connectors of the power connections and the fixing brackets and take out the control panel [5], the gearmotor [1] and the batteries [9] (if fitted).
- (Fig. 5) Fasten the base plate [7] to the wall so it is stable and level.

Note: check the position of the bracket [10] as shown in figures 6, 14 and 21.

- Distance [X] and the correct position of the anti-noise seal of the gearmotor depend on the type of rotating arm used.
- Reposition the components according to the type of the arm and opening directions of automation.

3.3 OUTSWING DOOR ARM INSTALLATION

Use the outswing door arm for automations that open outwards as seen from the gearmotor side.

- (Fig. 5) The anti-noise seal of the gearmotor must remain between the bracket [10] and the hinges of the door (position A).
- (Fig. 9) Remove the jaw of the outswing door arm and fasten it to the door.

Note: the reinforcement [11] is not supplied by us.

- (Fig. 11) Separate the threaded round piece [12] from the perforated tube [13].
- (Fig. 12) Fasten the round piece [12] to the jaw on the door.

- Fasten the rotating pin [14] of arm [15] anticipating by one tooth α° the perpendicular to the automation.
- Fully close the door and fasten together the round piece [12] and the perforated tube [13]. To centre the holes and the threads, slightly push the articulation of the arm [15] in the door opening direction.

Note.: If the round piece [12] and the perforated tube [13] are too long, cut off any excess.

- Make sure that when the door is closed, between the arm [15] and the rotation pin [14] there is a corner turned towards the door opening.
- (Fig. 13) Tighten the fixing screw [17] well and lock it with the headless screw M6 [16].

Note: To turn the articulated arm from left to right, see the sequence indicated in figure 13.

- (Fig. 25) **For Transit UE and Super Transit 95 only.**
  To permit preloading the spring, remove the shim [24] and make sure that when the door is closed there is a play of at least 3 mm between the rack and its stop.
  To achieve greater closing thrust, the spring preload will have to be increased.
- (Fig. 26) For good operation, the lock should close lightly and when the door is closed, 3 mm of play should remain.
- Fasten the heads [8] and close the automation with the casing [6].
- Fit the opening stop.

Important: the floor stops must be fastened in a visible position so there is no risk of people tripping over them.

3.4 INSWING DOOR ARM INSTALLATION

Use the inswing door arm for automations that open inwards as seen from the geared motor side.

- (Fig. 5) The anti-noise seal of the gearmotor must remain between the bracket [10] and the opposite side to the door hinges (position B).
- (Fig. 17) Fasten the slide guide [18] on the door.

Note: the reinforcement [11] is not supplied by us.

- (Fig. 19) Pass the slide insert [19] in the race of the guide [18] fastened to the door. With the door well closed, fit the rotating arm.
- (Fig. 20) Tighten the fixing screw [17] well and lock it with the headless screw M6 [16].
- (Fig. 25) **For Transit UE and Super Transit 95 only.**
  To permit preloading the spring, remove the shim [24] and make sure that when the door is closed there is a play of at least 3 mm between the rack and its stop.
  To achieve greater closing thrust, the spring preload will have to be increased.
- (Fig. 26) For good operation, the lock should close lightly and when the door is closed, 3 mm of play should remain.
- Fasten the heads [8] and close the automation with the casing [6].
- Open the door at 90° and limit the arm stroke by fastening the insert [19].

3.5 Transit Bras INSWING DOOR ARM INSTALLATION

Use the Transit Bras inswing door arm for automations that open inwards as seen from the geared motor side.

- (Fig. 5) The anti-noise seal of the gearmotor must remain between the bracket [10] and the opposite side to the door hinges (position B).
- The fastening distance of the automatism with respect to the door can be up to 185 mm (fig. 22) or up to 45 mm (fig. 23).
- (Fig. 22) Regulate the arm length [20]+[21] so as to form an angle between 80°÷90° with respect to the arm [22], with door closed.
  Note: The Transit Bras inswing door arm is assembled for left opening doors. In the case of right opening doors, separate the arm [21] from the arm [22] (by removing the pin) and reassemble the two arms turned by 180°.
- (Fig. 23) For distances between 45 mm and 20 mm, remove the arm [21] and fasten the arm [22] to the bracket [20] with the spacer and screw provided, so as to always form an angle between 80°÷90° with respect to arm [23].
- Fasten the heads [8] and close the automation with the casing [6].
- Fit the opening stop.

Important: the floor stops must be fastened in a visible position so there is no risk of people tripping over them.

4. TRANSIT UE - ELECTRICAL CONNECTIONS

GB

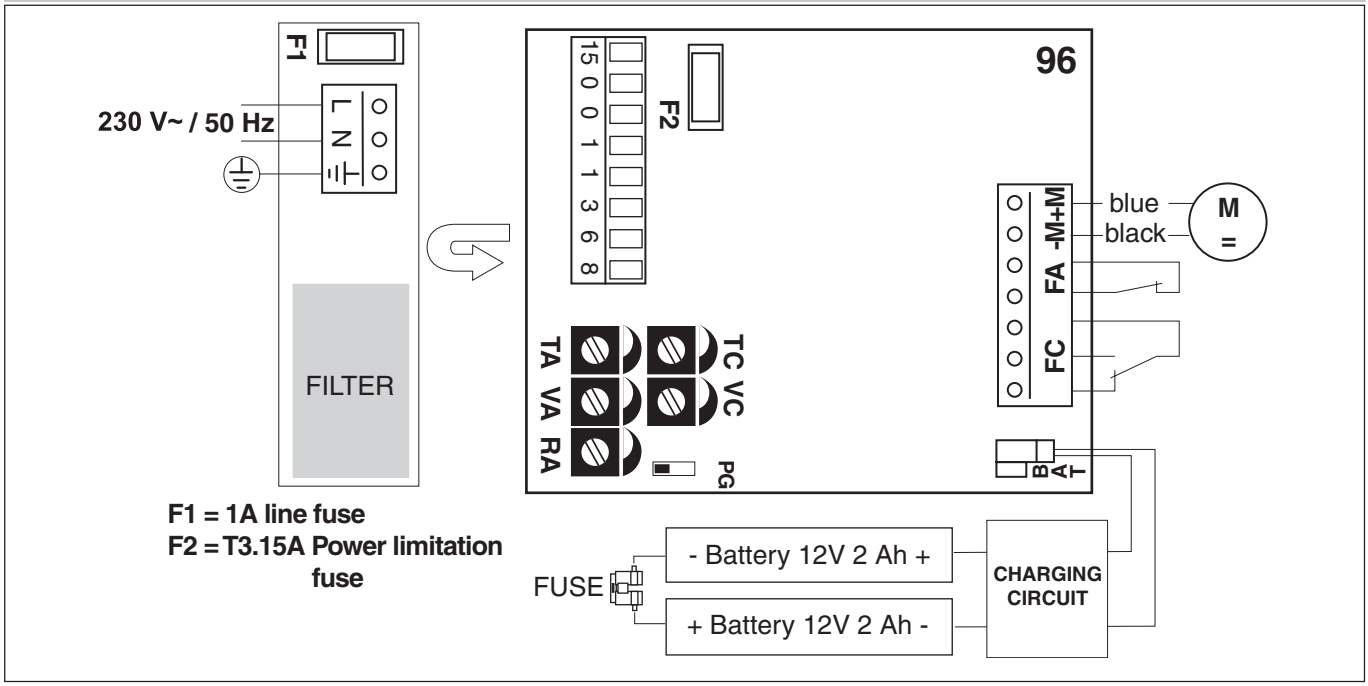

Warning. Make a jumper among all the N.C. contacts if not used. The terminal bearing the same number are equivalent.

4.1. CONTROL PANEL 96 - CONTROLS

Control		Function	Description
1 — 3	N.O.	OPENING	Open command. The open command is regulated by trimmer TA. *Note: To keep the automation stopped and open, close contact 1-3.*
1 — 6	N.C.	SAFETY STOP DURING OPENING	The opening operation in progress is suddenly slowed down until it come to a complete stop without stopping the count of stop and automatic closing times.
1 — 8	N.C.	REVERSAL SAFETY CONTACT	Causes reversal of movement (reopening) during closing. Not operative when the automation is closed.
FA	N.C.	OPENING LIMIT SWITCH	Slow-down during opening.
FC	N.O.	CLOSING SLOWING DOWN LIMIT SWITCH	Slow-down during closing.

4.2. CONTROL PANEL 96 - OUTPUT AND ACCESSORIES

Output/Access.	Value	Description
1 — + **0 — -**	24 V= / 0.5 A (peak)	**Accessories power supply.** Output for external accessories power supply.
0 — 15	max. 1,2 A	**Electric lock (impulsive output).** At each opening command received with the automation closed or during the closing operation the electric lock is energised for 1 s. (Fig. 26) For correct operation, the lock latch must be light and, with door closed, there must be a play of 3 mm between the latch and the fixed frame. (Fig. 25) The automation closing spring must be slightly loaded, meaning that with the automation closed, the rack must stop at 3÷5 mm from its stop.
BAT		**Batteries kit.** By connecting the battery kit, operation is ensured in continuous mode, including in the case of a mains power break. To charge the batteries, connect the mains and batteries kit at least 30 min. before starting the system. To disconnect the control panel, interrupt the power supply and disconnect the batteries. *Important: to allow recharging, the batteries kit must always be connected to the control panel. Periodically, verify the battery efficiency.*

GB

4.3. CONTROL PANEL 96 - TRIMMER ADJUSTMENT

	DESCRIPTION	MIN.	MAX.
TA	**Duration of opening command.** Adjust the duration of extensions of contact 1-3.	0 s	25 s
TC	**Open stop time.** Adjust the opening stop time. The count starts after the FA operates and upon the elapsing of the time set by TA.	0 s	25 s
VA	**Opening speed.** Adjust the opening speed.	10 s/90°	2 s/90°
VC	**Closing speed.** Adjust the closing speed.	8 s/90°	3 s/90°
RA	**Slow-down speed adjustment.** Adjust the opening time after the FA limit switch has operated.	/	/

4.4. CONTROL PANEL 96 - DIP SWITCH SELECTION

	DESCRIPTION	OFF	ON
PG	**“Push and Go” manual push opening**	Disabled	Enabled

4.5. DOOR REQUIREMENTS FOR TRANSIT OF DISABLED PERSONS

If the TRANSIT UE is used on doors for transit of disabled persons, regulate VA and VC so the opening and closing times (excluding deceleration) are the same or higher than those indicated on the following table.

Door lenght	Door weight				
	50 kg	**60 kg**	**70 kg**	**80 kg**	**90 kg**
750 mm	3 s	3.1 s	3.2 s	3.3 s	3.5 s
850 mm	3.1 s	3.1 s	3.2 s	3.4 s	3.6 s
1000 mm	3.2 s	3.4 s	3.7 s	4 s	4.2 s
1200 mm	3.8 s	4.2 s	4.5 s	4.8 s	5.1 s

Make the adjustments as shown in the illustration:

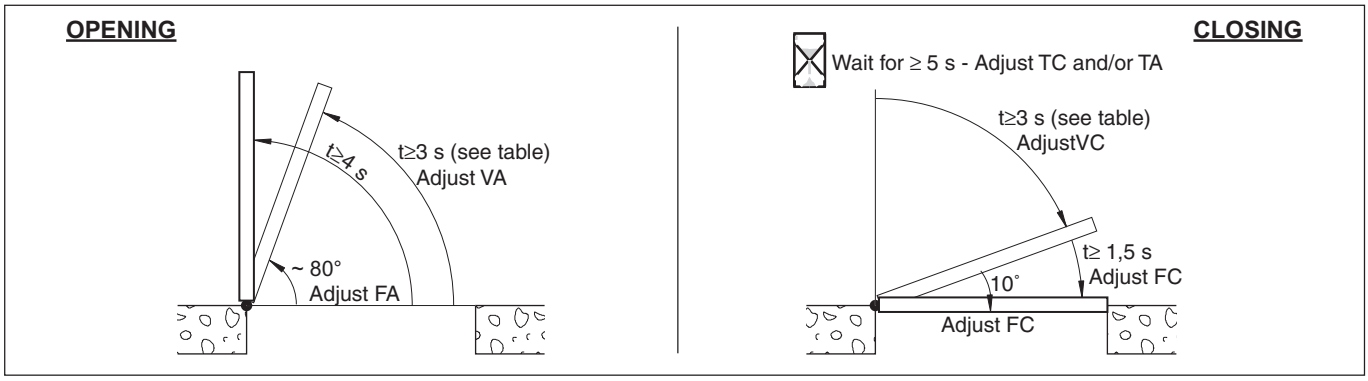

5. CONTROL PANEL 96 - START

Warning: ***The operation regarding point 5.3 are without safety devices.***
The trimmer can only be adjusted with door not moving.

5.1 Adjust all the trimmers at 1/4 rotation.
5.2 Jump the safety devices (1-6, 1-8).
5.3 Power and by means of controls 1-3 check that the automation is working properly. Set the automation’s speed by means of the VA and VC trimmer, with trimmer RA the slow down speed during opening, with trimmer TA the time of duration of command 1-3 and with TC the open break time. Move the opening and closing limit switch until the correct slow-down time is attained.
5.4 Value the risk involved. Install and connect all necessary safety device (1-6, 1-8) to the control panel and check their functioning.
5.5 If push opening is desidered, set DIP PG=ON.
5.6 Connect any accessories and check their function.

6. SUPER TRANSIT 95 AND TRANSIT 97 ELECTRICAL CONNECTIONS

GB

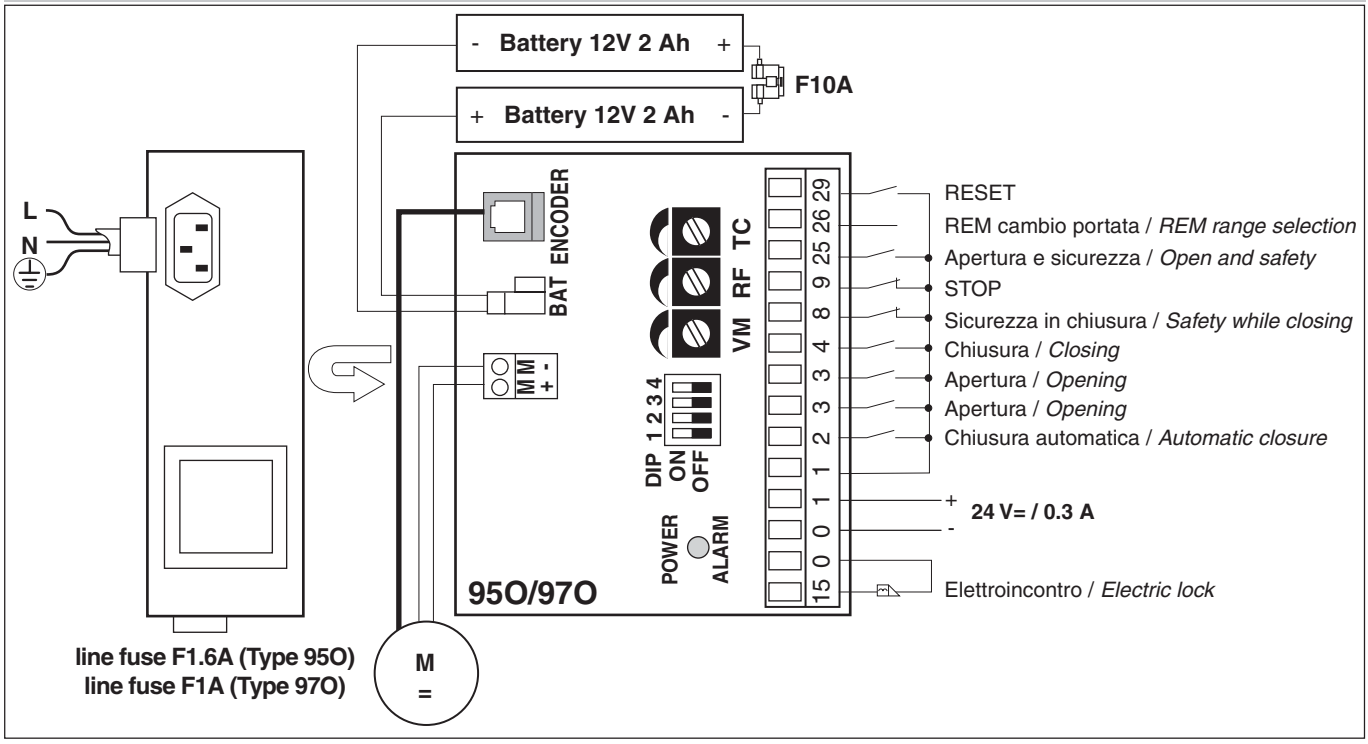

Warning. Make a jumper among all the N.C. contacts if not used. The terminal bearing the same number are equivalent.

6.1. CONTROL PANELS 95O AND 97O - CONTROLS

Control		Function	Description
1 — 2	N.O.	AUTOMATIC CLOSING	A permanent contact enables automatic closing.
1 — 3	N.O.	OPENING	It starts the opening operation.
1 — 4	N.O.	CLOSING	It starts the closing operation.
1 — 8	N.C.	REVERSAL SAFETY CONTACT	Causes reversal of movement (reopening) during closing. Not operative when the automation is open.
1 — 9	N.C.	STOP	Stops any movement. When the contact is opened, all normal or emergency operations are prevented. *Important: when the contact is closed again, or within a minimum time of 1 s, the automation starts the interrupted movement again.*
1 — 25	N.O.	OPENING AND SAFETY	The command 1-25 determines the following operations: - with the automation closed, it starts opening; - with the automation opening, it stops the movement for the duration of command. Once the command has terminated, the automation completes opening; - with the automation closing, it stops the movement for the duration of command. After the command, the automation reopens. *Note: the command 1-25 should be used together with radar REM25-REM100.*
1 — 29	N.O.	RESET	Cancels all required data.

GB

6.2. CONTROL PANELS 95O AND 97O - OUTPUT AND ACCESSORIES

Output/Access.	Value	Description
1 ●——— + 0 ●——— -	24 V= / 0.5 A (peak)	**Accessories power supply.** Output for external accessories power supply.
0 ●—⊠—● 15	max 1,2 A	**Electric lock (impulsive output).** At each opening command received with the automation closed or during the closing operation the electric lock is energised for 1 s. (Fig. 26) For correct operation, the lock latch must be light and, with door closed, there must be a play of 3 mm between the latch and the fixed frame. **Super Transit 95 only .** (Fig. 25) The automation closing spring must be slightly loaded, meaning that with the automation closed, the rack must stop at 3÷5 mm from its stop.
26 ●——— P		**Radar type REM range change.** Connect the terminal 26 of the control panel to terminal P on the REM25-REM100. The switch from long range to short range occurs at the start of automation opening and the REM remains in short range until the automation is completely closed.
BAT		The control panel only connects the battery in the presence of a mains supply and keeps it charged; it uses it as a buffer or when there is a mains supply break and disconnects it when voltage drops below 22 V after 30 s. To charge the batteries, connect the mains and batteries kit at least 30 min. before starting the system. To disconnect the control panel, interrupt the power supply and disconnect the batteries. *Important: to allow recharging, the batteries must always be connected to the control panel. Periodically, verify the battery efficiency.*

6.3. CONTROL PANELS 95O AND 97O - TRIMMER ADJUSTMENT

	DESCRIPTION	MIN.	MAX.
TC	**Automatic closing time.** Adjust the time between the end of the opening operation and the start of automatic closing.	0 s	30 s
VM	**Movement speed adjustment.** Opening speed. Closing speed.	 6 s/90° 8 s/90°	 3 s/90° 4 s/90°
RF	**Force adjustment.** Adjust the maximum force of the motor and sensitivity to obstacles. By increasing RF, the force of the motor is increased and sensitivity to obstacles is reduced.	/	/

6.4. CONTROL PANELS 95O AND 97O - DIP SWITCH SELECTION

	DESCRIPTION	OFF	ON
DIP1	**Electric lock release**	The pulse is given at the same time as motor starts on opening.	**Super Transit 95.** The pulse is given 0.1 s before the motor starts. **Transit 97.** Before opening, a closing thrust is introduced equal to 0.1 s at the same time as the electric lock operating pulse.
DIP2	**Spring latch operation**	Disabled	Enabled. At about 20° from the closing stop, the automation automatically increases force to ensure correct closing in the presence of an electric lock.
DIP3	**“Push and Go” push opening**	Disabled	Enabled
DIP4	**Brake angle selection** ***(Super Transit 95 only)***	Braking at 15° from the opening stop	Braking at 30° from the opening stop

6.5. CONTROL PANELS 95O AND 97O - SIGNALS

LED	ON	FLASHING
POWER ALARM	24 V= power supply on.	Automation / Encoder fault

7. CONTROL PANELS 95O AND 97O - START

Warning: ***The operation regarding point 7.4 are without safety devices.***
The trimmer can only be adjusted with door not moving.

7.1 In the event of the electric lock being fitted, set DIP1-2=ON.
7.2 Adjust all the trimmers at 1/4 rotation.
7.3 ıJmp the safety devices (1-8, 1-9).
7.4 Power and by means of controls 1-3 and 1-4 check that the automation is working properly. Set the automation's speed by means of the VM trimmer.
Important: Upon each turning on the control panel automatically RESETs so as to permit the first opening and closing to be made at low speed in order to learn the end-of-travel positions (acquisition phase).
7.5 Value the risk involved. Install and connect all necessary safety device (1-8, 1-9) to the control panel and check their functioning.
7.6 If desidered, connect 1-2 and adjust automatic closing by means of TC trimmer.
7.7 Make sure RF is set in a position to make the automation work properly and guarantee user's safety in case of accidental contact.
7.8 If push opening is desidered, set DIP3=ON.
7.9 **Super Transit 95 only.** If a heavy door is set at high speed, set DIP4=ON.
7.10 Connect any accessories and check their function.
7.11 If the automated device encounters an obstacle while closing, it detects it and reopens. If it encounters an obstacle while opening, it detects it and stops. In later manoeuvres, the obstacle will be considered a new stop until it is removed.

8. TROUBLESHOOTING

PROBLEM	POSSIBLE CAUSE	REMEDY
The automation doesn't open and doesn't close	No power supply.	Make sure the control panel is powered (ST95 and T97 only: the POWER ALARM led must be on steady).
	Accessories in short circuit.	Disconnect all accessories from terminals 0-1 (24 V= must be present) and reconnect them one at a time.
	Line fuse born out.	Replace line fuse.
	STOP contact is open.	Check terminal 9 on control panel.
	The automation is locked by bolts and locks	Check that the wing move freely.
The automation opens but doesn't close	Safety contacts are open.	Check terminal 8 on control panel.
	Safety devices are on.	Check the photocells and safety device are clean and work correctly.
	Radars are on.	Check that the radar is not subject to vibration, does not perform false detections, or presence of moving bodies in its field of action.
	Automatic closing not working.	Check jumper 1-2 (ST95 and T97 only). Make sure the limit switch FA engages and check adjustment of trimmer TA (TUE only).
The automation opens by itself	Radars unstable or detect bodies in motion.	Check that the radar is not subject to vibration, does not perform false detections, or presence of moving bodies in its field of action.
The automation opens/ closes a short distance and then stops	Encoder broken (ST95 and T97 only: led POWER ALARM flashing).	Replace encoder.
	Motor wires inverted (ST95 and T97 only: led POWER ALARM flashing).	Check motor wires.
	Friction present.	Manually check that the wings move freely (make sure there is non dirt or stones underneath the door.

GB

9. TRANSIT UE, SUPER TRANSIT 95 AND TRANSIT 97 PARALLEL AUTOMATIONS

A double door can be controlled by two parallel automations, by connecting the terminals 1 and 3 of the two control panel.
The automations open together and close at the same time according to how the TC of one or both the control panel is set.
Note: When door is closed, the remaining distance must be such as to avoid the doors coming into contact during movement (Fig. 27).

10. TRANSIT UE, SUPER TRANSIT 95 AND TRANSIT 97 MAINTENANCE PROGRAM (each 6 month)

Power off 230 V~ power supply and batteries (if present):
- Clean and lubricate the moving components.
- Check that all securing screws are well tightened.
- Check all wiring.
- Check battery efficiency.

Power on 230 V~ power supply (if present):
- Check for the stability of the door and that the movement is steady, without friction.
- Check the condition of the pintles or hinges.
- Check that all controls are properly functioning and check for the correct operation of the limit switches.

Attention: For spare parts, see the spare price list.

All right reserved
All data and specifications have been drawn up and checked with the greatest care. The manufacturer cannot however take any responsibility for eventual errors, ommisions or incomplete data due to technical or illustrative purposes.

OPERATING INSTRUCTION FOR TRANSIT SWING DOORS

GB

To keep the door open, have a switch featuring the permanent function 1-2 (for Super Transit 95 and Transit 97), the permanent function 1-3 (for Transit UE) installed by a skilled and qualified technician.
In case of faulty operation or power failure, push the door by hand.
If the door is fitted with an electric lock, use the appropriate key to unlock it.

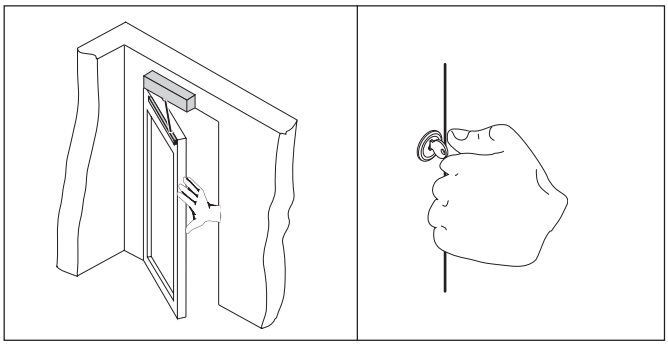

GENERAL SAFETY PRECAUTIONS

The following precautions are an integral and essential part of the product and must be supplied to the user.
Read them carefully as they contain important indications for the safe installation, use and maintenace.
These instruction must be kept and forwarded to all possible future user of the system.
This product must be used only for that which it has been expressely designed.
Any other use is to be considered improper and therefore dangerous.
The manufacturer cannot be held responsible for possible damage caused by improper, erroneous or unresonable use.
Avoid operating in the proximity of the hinges or moving mechanical parts.
Do not enter the field of action of the motorised door or gate while in motion.
Do not obstruct the motion of the motorised door or gate as this may cause a situation of danger.
Do not lean against or hang on to the barrier when it is moving.
Do not allow children to play or stay within the field of action of the motorised door or gate.
Kep remote control or any other control devices out of the reach of children, in order to avoid possible involuntary activation of the motorised door or gate. In case of breack down or malfunctioning of the product, disconnect from mains, do not attempt to repair or intervene directly and contact only qualified personnel.
Failure to comply with the above may create a situation of danger.
All cleaning, maintenance or repair work must be carried out by qualified personnel.
In order to guarantee that the system works efficiently and correctly it is indispensable to comply with the manufacturer's indications thus having the periodic maintenance of the motorised door or gate carried out by qualified personnel.
In particular regular checks are recommended in order to verify that the safety devices are operating correctly. All installation, maintenance and repair work must be documented and made available to the user.

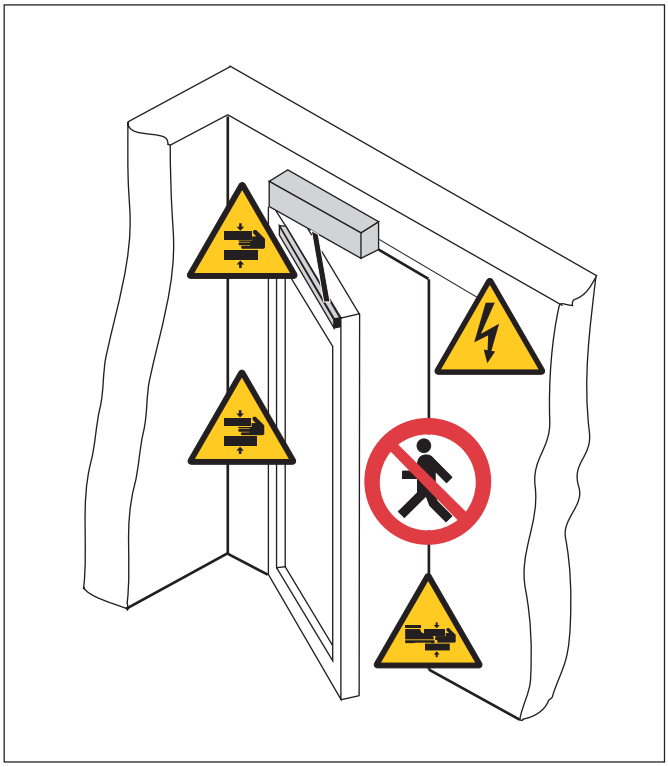

TEAR OFF AND DELIVER TO USER

DITEC S.p.A.
Via Mons. Banfi, 3
21042 Caronno Pertusella (VA) - ITALY
Tel. +39 02 963911 - Fax +39 02 9650314
www.ditec.it - ditec@ditecva.com

Installer:

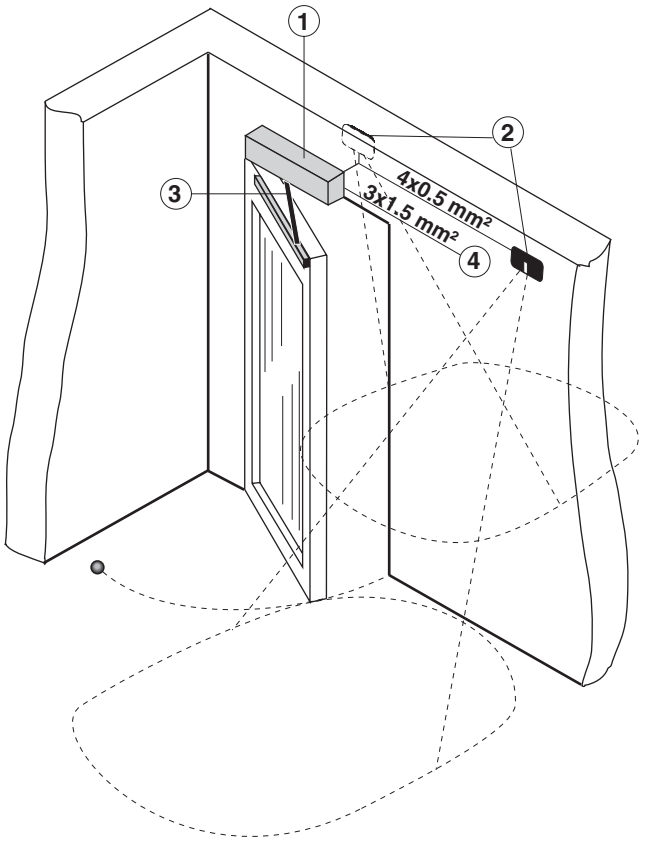

Fig. 1

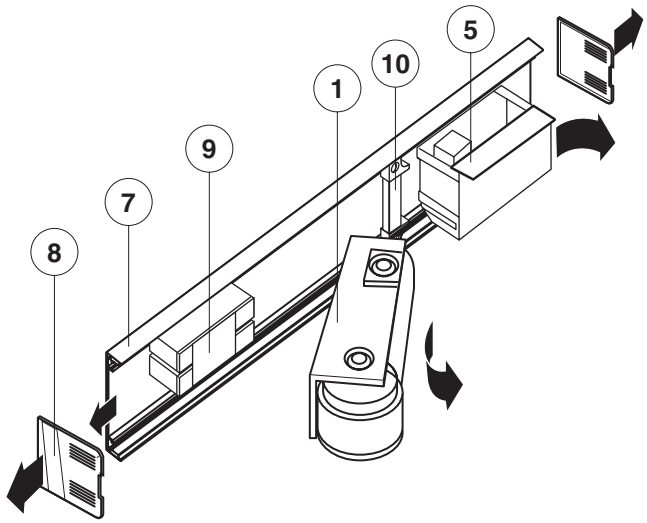

Fig. 2

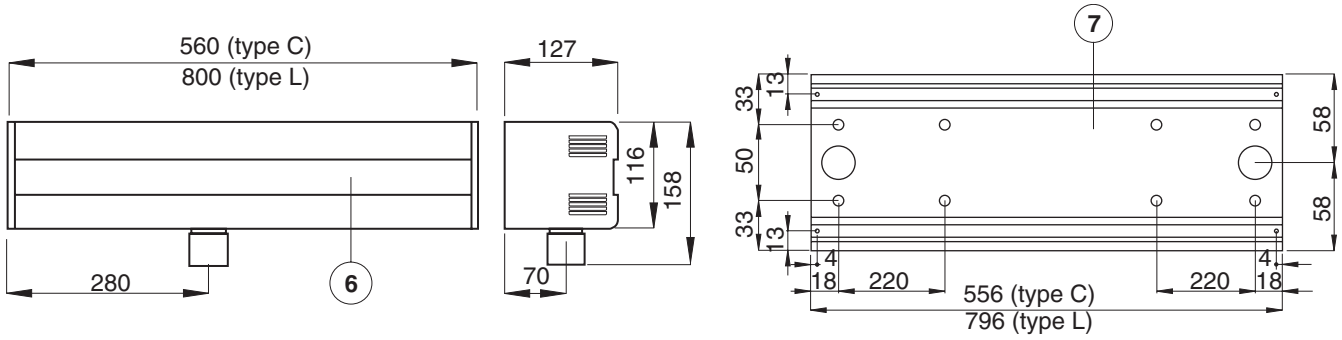

Fig. 3

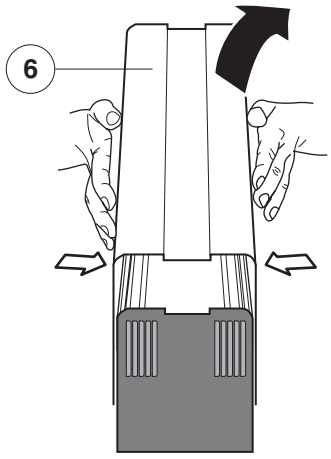

Fig. 4

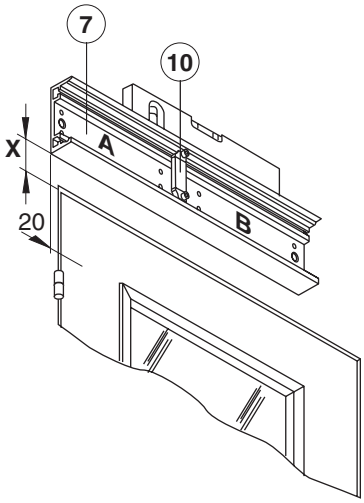

Fig. 5

BRACCIO ARTICOLATO - OUTSWING DOOR ARM - BRAS ARTICULÉ
GELENKARM - BRAZO ARTICOLADO - BRAÇO ARTICULADO

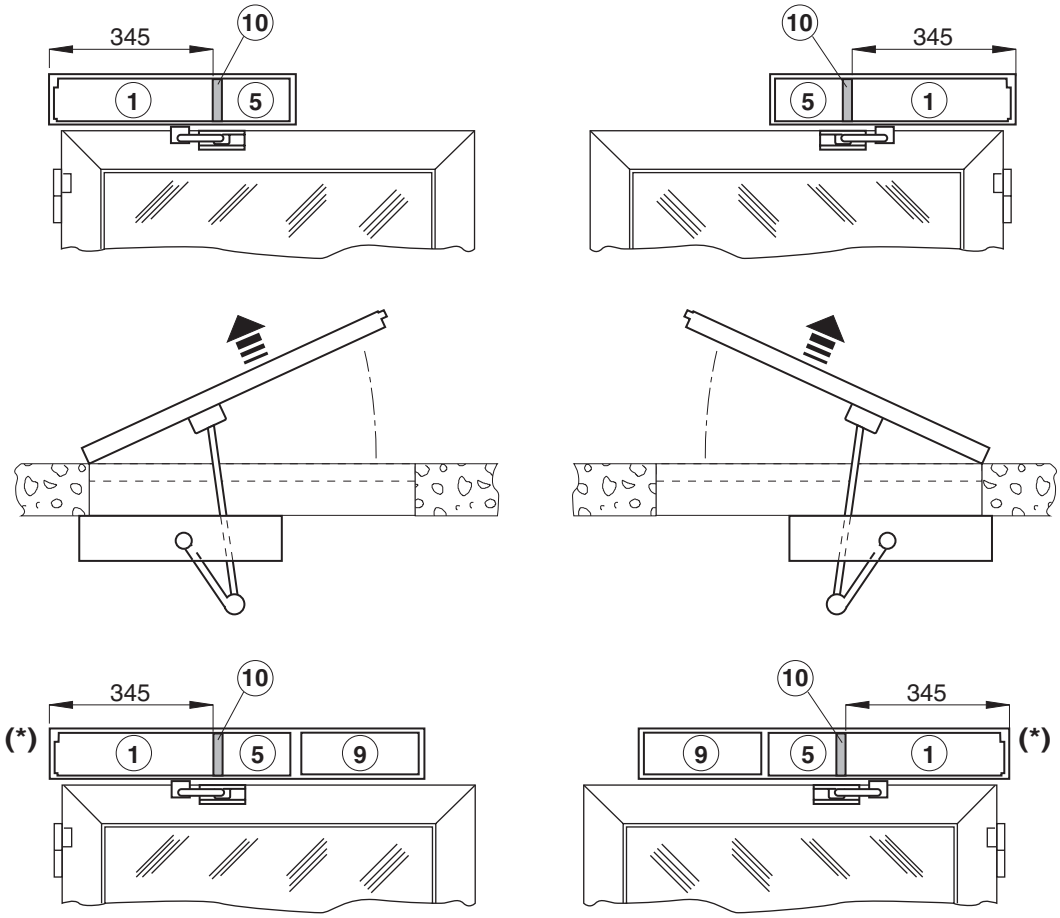

(*) **(I)** Invertire la posizione del motore [1] e del quadro elettronico [5] - **(GB)** Reverse the position of motor [1] and control panel [5] - **(F)** Inverser la position du moteur [1] et de l'armoire de commande [5] - **(D)** Kehren Sie die Position von Motor [1] und Steuerung [5] um - **(E)** Invertir la posciòn del motor [1] y del cuadro electrònico [5] - **(P)** Inverter a posição do motor [1] e do quadro electrònico [5].

Fig. 6

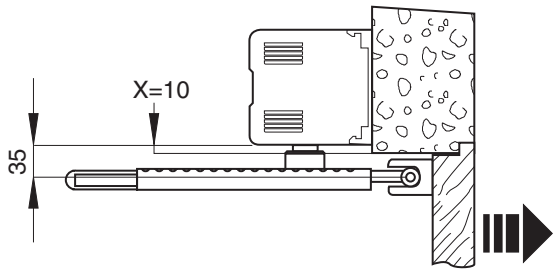

Fig. 7

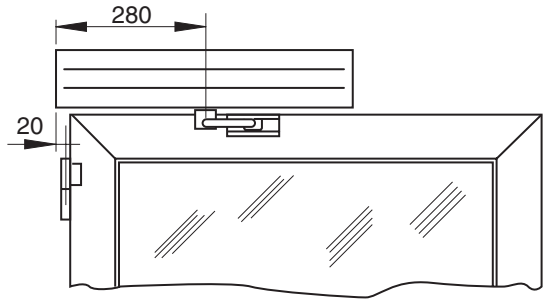

Fig. 8

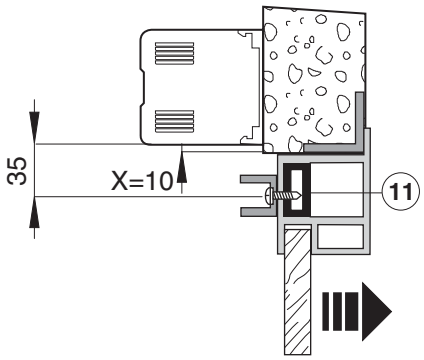

Fig. 9

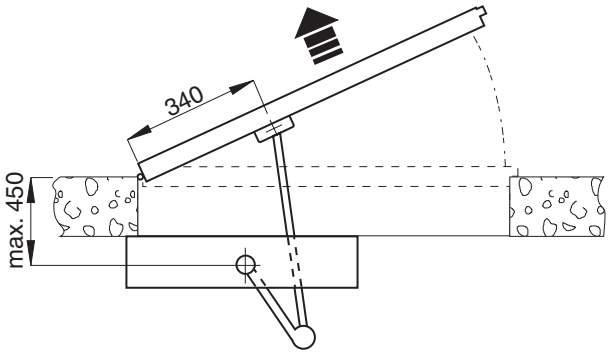

Fig. 10

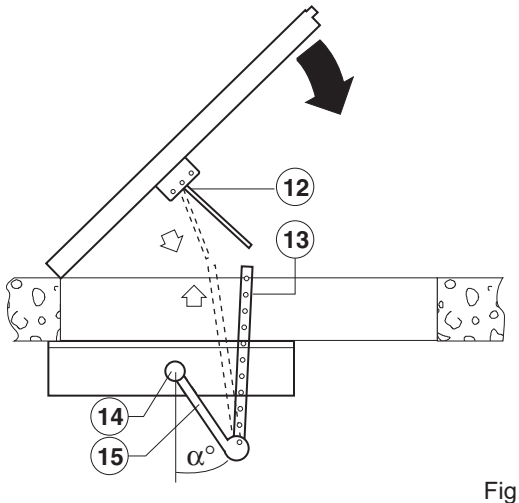

Fig. 11

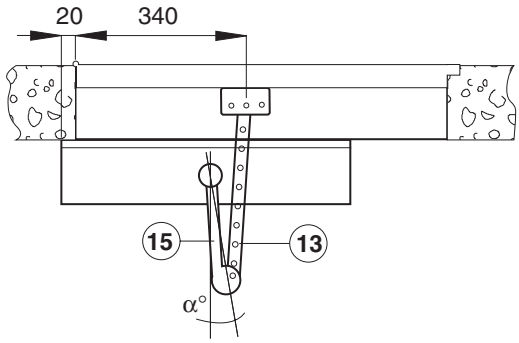

Fig. 12

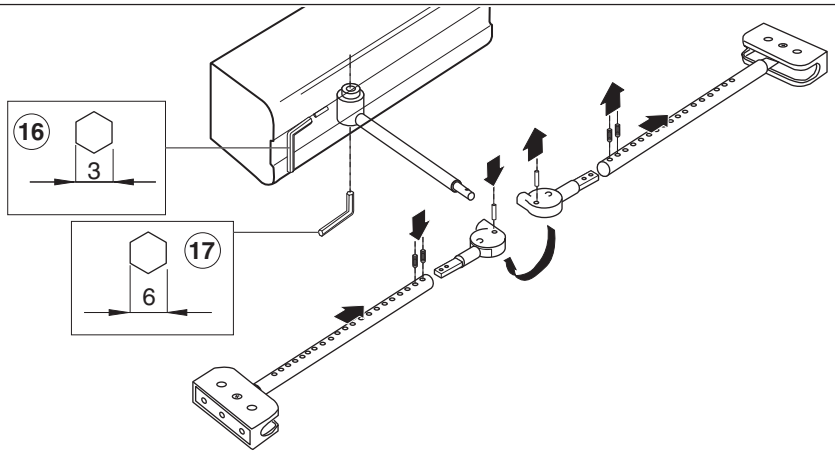

Fig. 13

BRACCIO SCORREVOLE - INSWING DOOR ARM - BRAS COULISSANT GLEITARM - BRAZO DESLIZANTE - BRAÇO DESLIZANTE

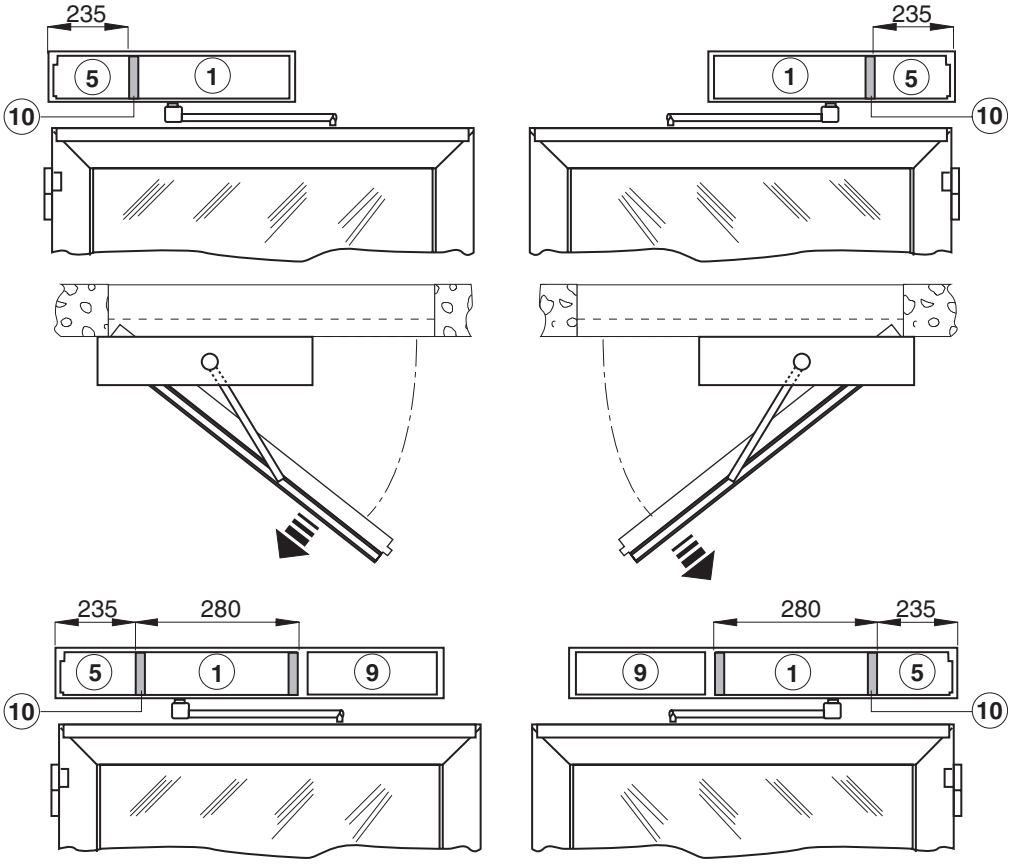

Fig. 14

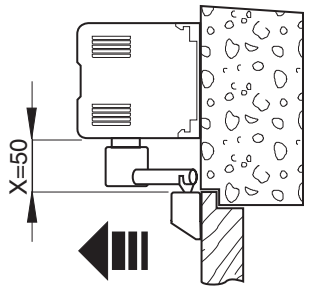

Fig. 15

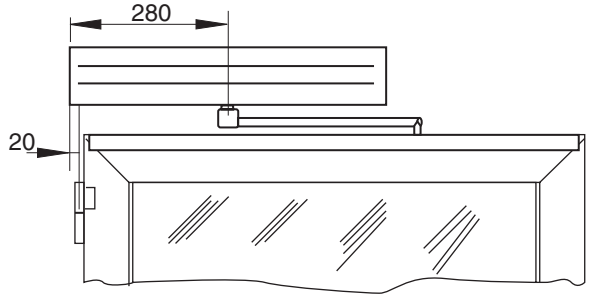

Fig. 16

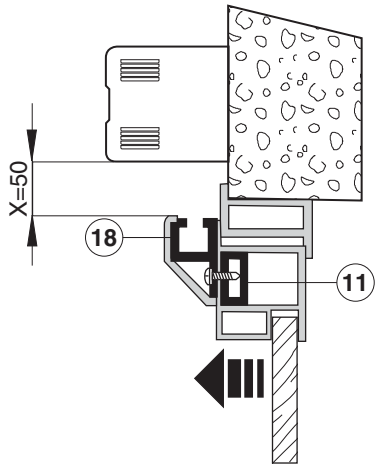

Fig. 17

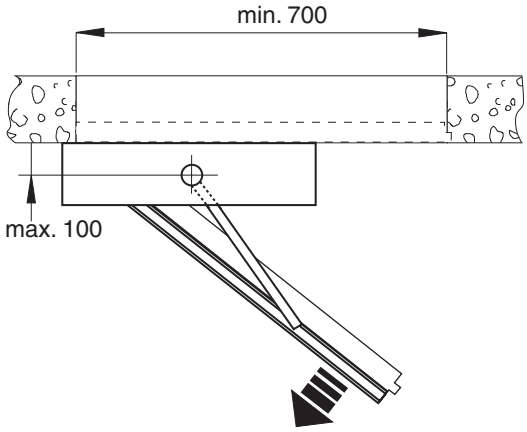

Fig. 18

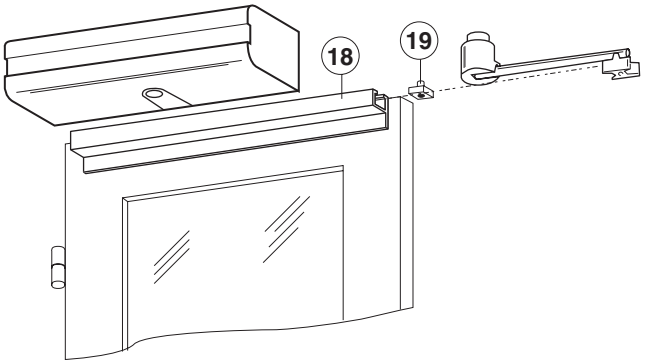

Fig. 19

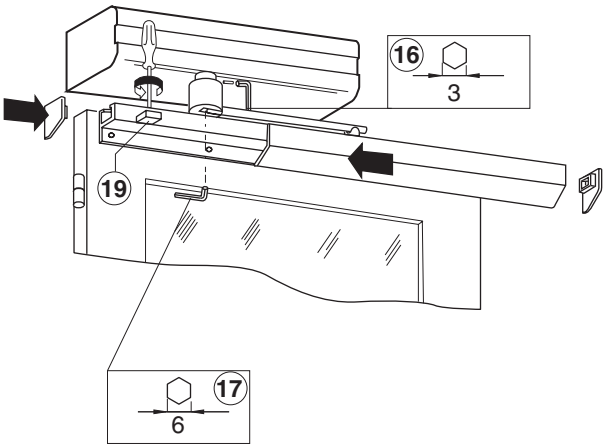

Fig. 20

BRACCIO ARTICOLATO Transit Bras - INSWING DOOR ARM Transit Bras
BRAS ARTICULÉ Transit Bras - GELENKARM Transit Bras
BRAZO ARTICOLADO Transit Bras - BRAÇO ARTICULADO Transit Bras

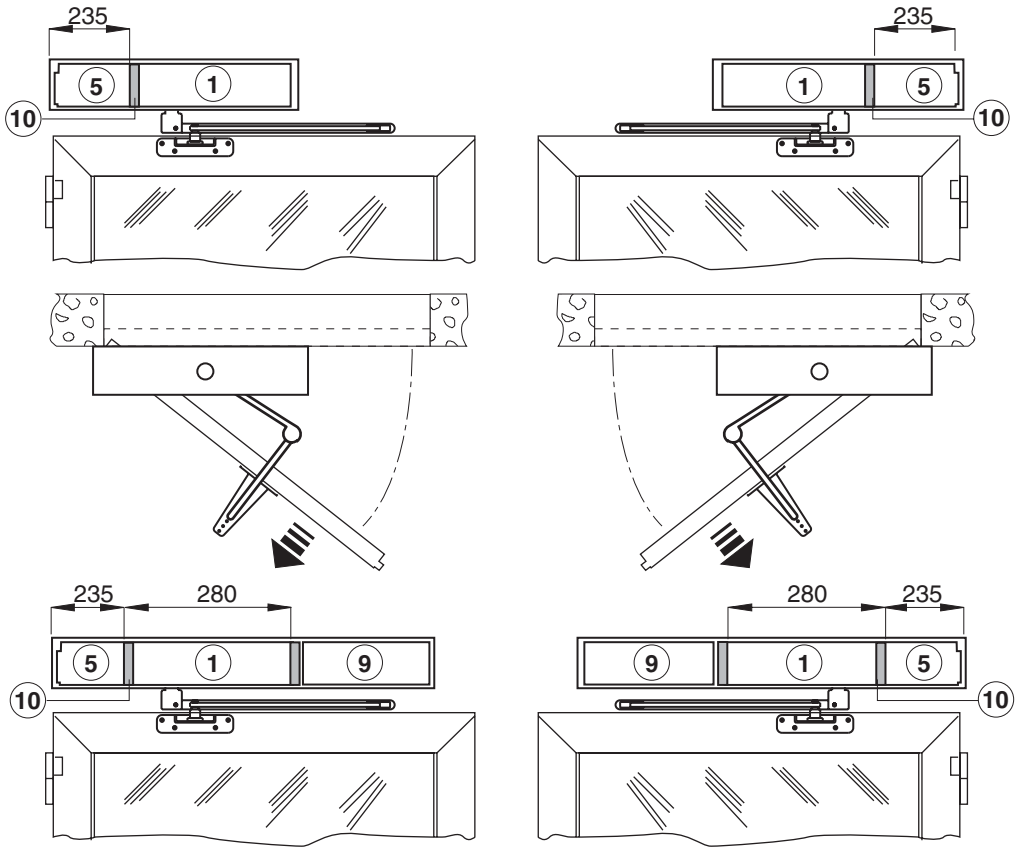

Fig. 21

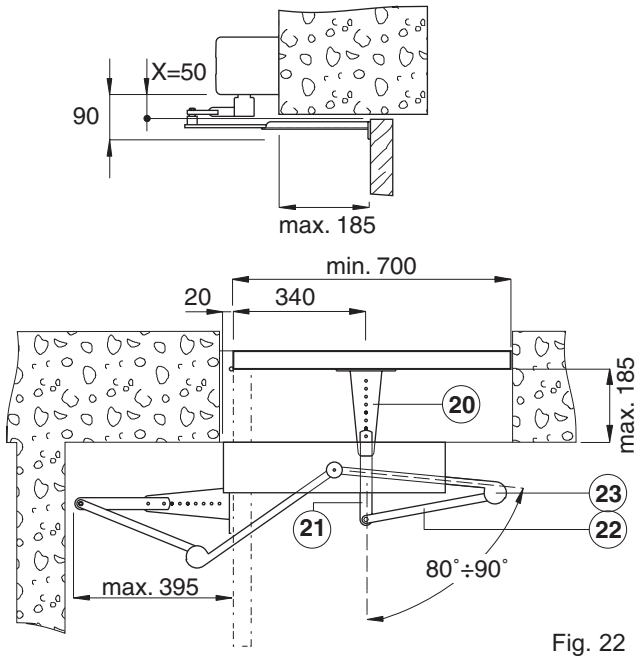

Fig. 22

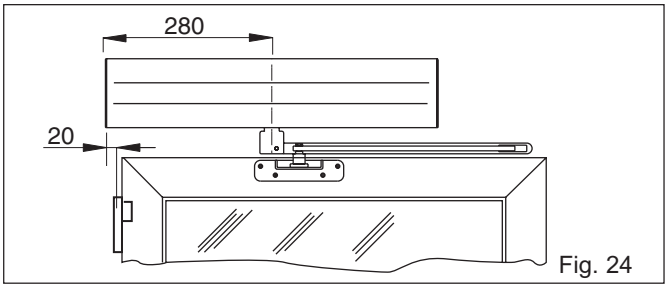

Fig. 24

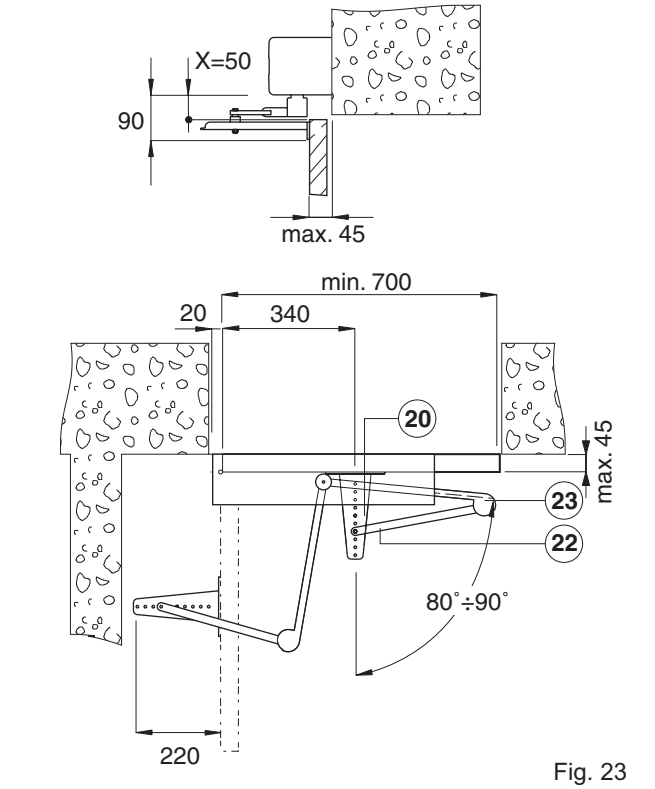

Fig. 23

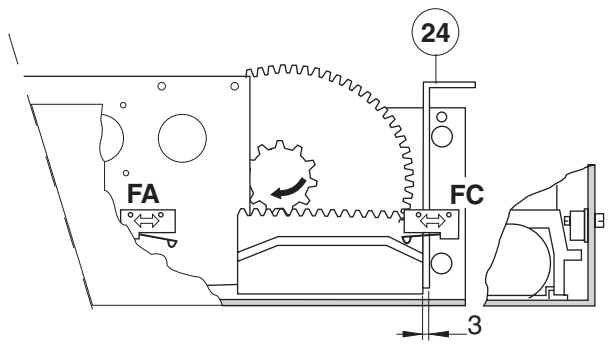

Fig. 25

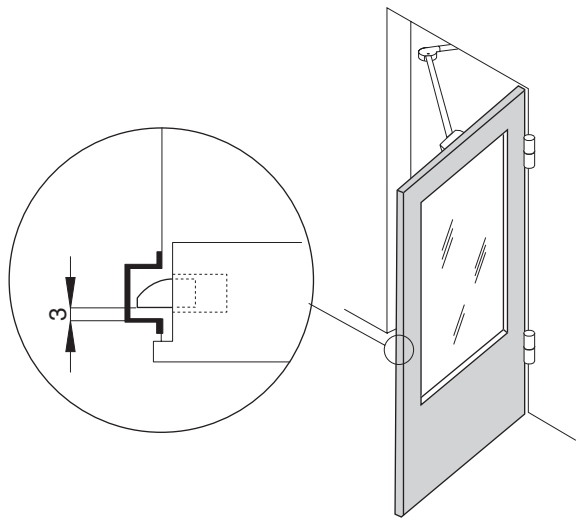

Fig. 26

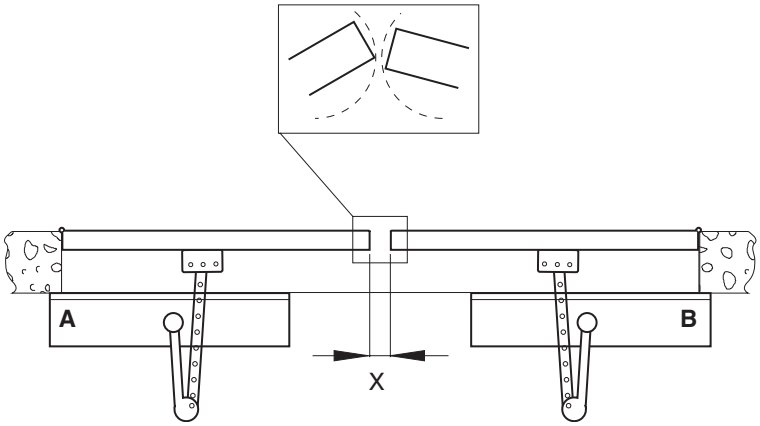

Fig. 27