TRITON CONTROLS

RELIABLE MINIATURE RADAR TECHNOLOGY FOR AUTOMATIC DOOR AND GATE CONTROL

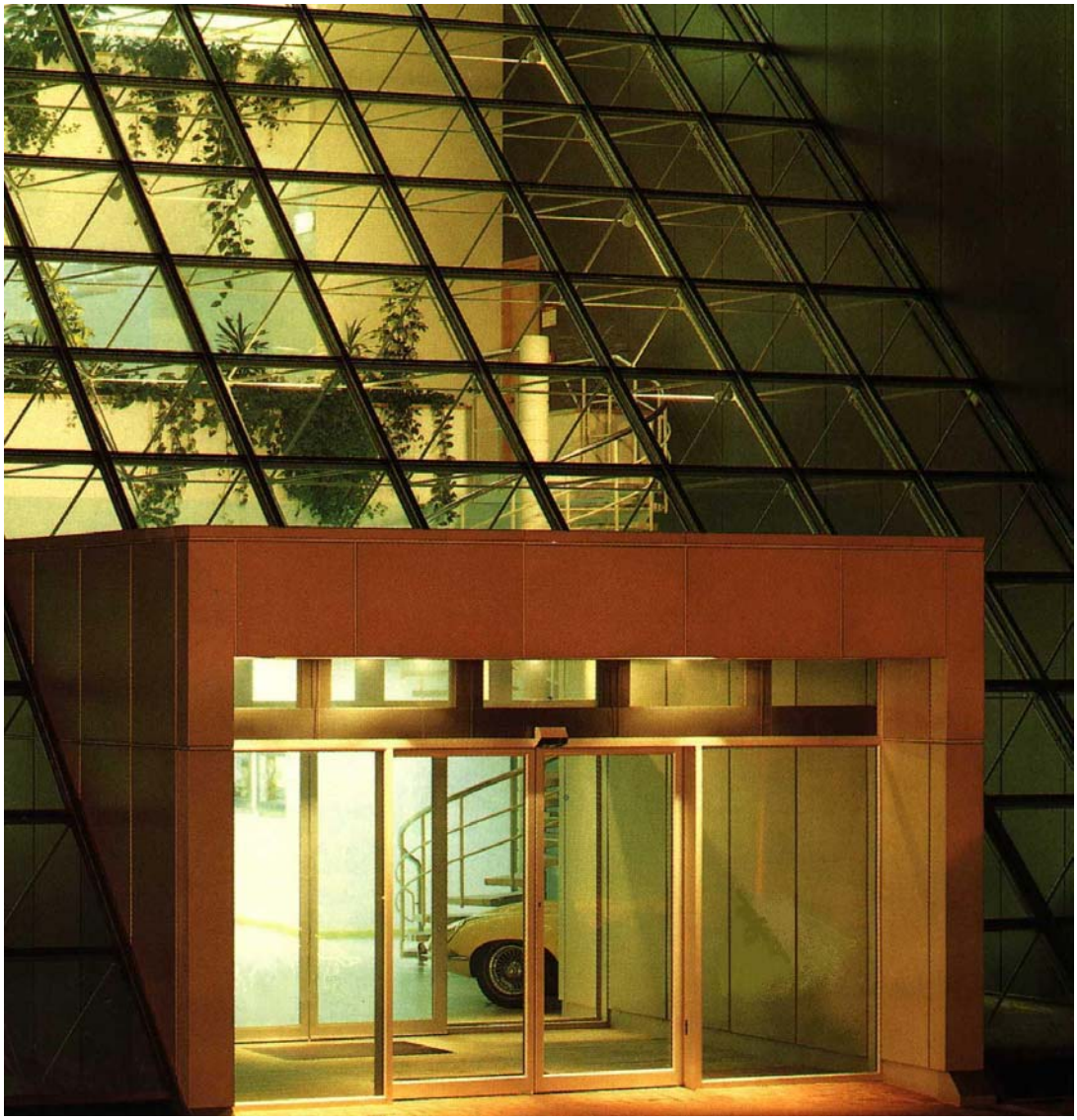

DS-20 SERIES ⟺ MOTION DETECTION

DS-40 SERIES ⟸ SINGLE DIRECTION MOTION DETECTION

- **CHOICE OF HOUSING**
- **ADJUSTABLE DETECTION PATTERNS**
- **EASY TO INSTALL AND ADJUST**
- **UNIVERSAL VOLTAGE RANGE-- 10.5V-28.5V ac/dc**

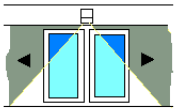

IN CONTROL

MODELS

The DS 20 and DS 40 Series Radars respond to movement from both animate and inanimate objects. The DS 20 series will react to movement in all directions whereas the DS 40 Series will only react when movement is towards the sensor.
Reliability, efficiency and simplicity were the major considerations on which the design of these units was based. They are available in either a black anodised aluminium case with a black acrylic snap-on cover for full storm and vandal proof protection or in a black ABS rectangular case with swivel bracket for internal or less exposed installations.

FEATURES

- Two distinct detection patterns are available. A long range, narrow beam antenna suited to industrial doors or restricted areas and a semi-circular beam pattern that enables a wide angle of approach as in bi-parting sliding doors.
- CE marked and fully suppressed again EMC.
- Versatility of supply. Power Supply 11-28.5V ac/dc
- Ease of adjustment. Sensitivity (Range) adjusted by a single easily accessed control.
- Simple installation. Equipped with plug in cable with removable screw terminal connector which means that cables can be pre-run without the need to thread through the connector. This also means that units can be changed without further connection.
- Relay output with change over contacts for fully "volt free" operation.

ADJUSTMENTS

The ground plans, figs1 and 2, illustrates the possible coverage patterns depending on range setting and antenna angle.
By adjusting the angle of the antenna the detection pattern can be changed between circular, elliptical lateral to elliptical longitudinal.
The sensitivity control, which is easily accessed from the front of the unit, determines the size, rather than the shape, of the detection area and can, therefore, be regarded as a **Range** control.

Fig. 1 WIDE BEAM

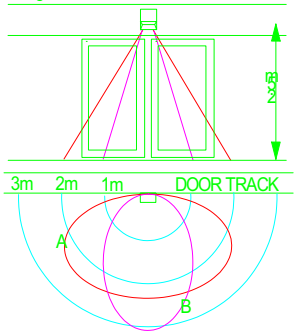

A: Tilt towards mounting face
B: Tilt away from mounting face

Fig. 2
NARROW BEAM

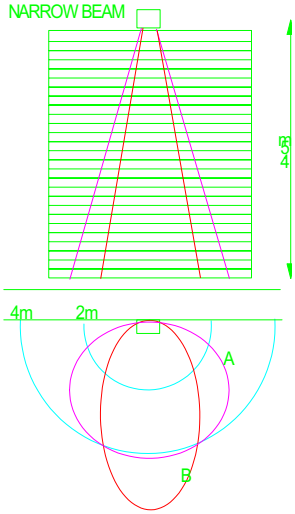

FLUSH MOUNT CASE IP54

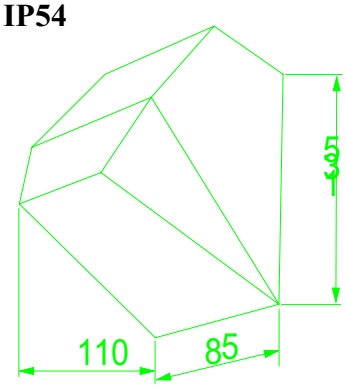

SWIVEL MOUNT CASE IP53

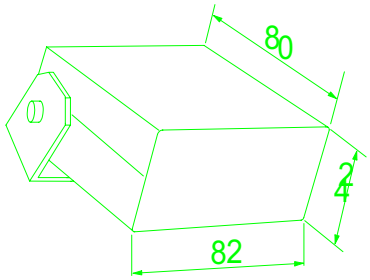

SPECIFICATION

Power supply *10.5-28.5V ac*
10.5-30V dc
Power requirements *2.5VA*
Current draw *50mA @24V dc*
Output relay…N.O. & N.C. contacts
Max horizontal range *up to 10M*
Depending on antenna.
Mounting height *up to 4.5M*
Depending on model.
Transmitter frequency *24.125GHz*
Transmitter Power *30mW typical*
Protective class
Surface mount case *IP54*
Plastic case *IP53*
Operating temperature *-20 to+50°C*

Cable length *2M*
LED Indicator *lit on activation*

SELECTION

MODEL	IP54 STORM & VANDAL PROOF CASE	PLASTIC CASE "U" BRACKET MOUNT	WITHOUT DIRECTION SENSE	WITH DIRECTION SENSE	WIDE BEAM ANTENNA	NARROW BEAM ANTENNA
DS-20		*	*		*	
DS-21		*	*			*
DS-25	*		*		*	
DS-26	*		*			*
DS-40		*		*	*	
DS-41		*		*		*
DS-45	*			*	*	
DS-46	*			*		*

TRITON CONTROLS LTD., UNIT 2 RANDOLPH INDUSTRIAL ESTATE, EVENWOOD,
BISHOP AUCKLAND, CO. DURHAM DL14 9SJ
Tel. +44 (0) 1388 833000 Fax +44 (0) 1388 833680
web. www.tritoncontrols.co.uk e-mail info@tritoncontrols.co.uk